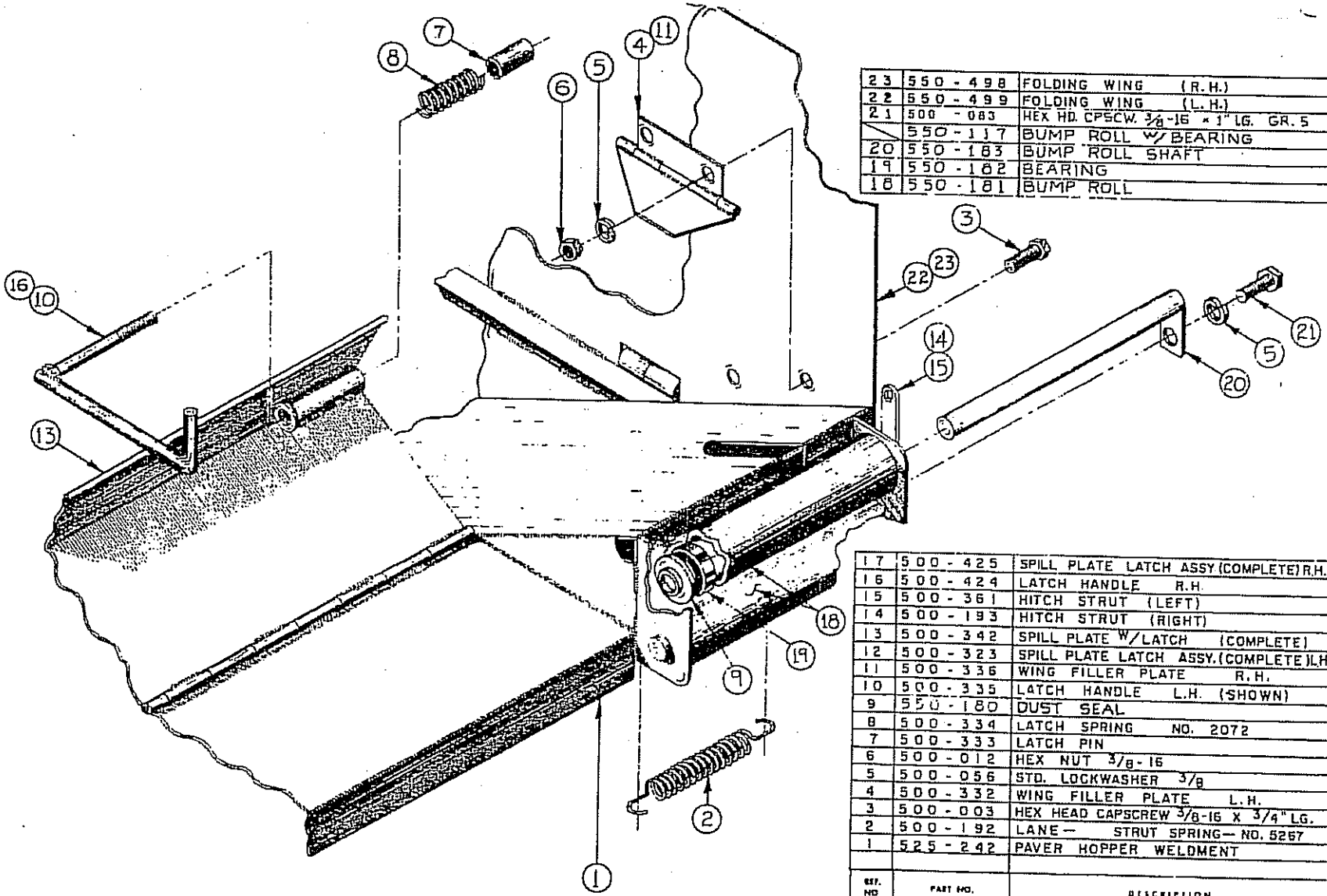

REF. NO	PART NO.	DESCRIPTION	NO REQ	DWG NO
23	550-498	FOLDING WING (R.H.)	1	
22	550-499	FOLDING WING (L.H.)	1	
21	500-083	HEX HD. CPSCW. 3/8-16 × 1" LG. GR. 5	4	
	550-117	BUMP ROLL W/BEARING	4	
20	550-183	BUMP ROLL SHAFT	4	
19	550-182	BEARING	8	
18	550-181	BUMP ROLL	4	
17	500-425	SPILL PLATE LATCH ASSY (COMPLETE) R.H.	1	
16	500-424	LATCH HANDLE R.H.	1	
15	500-361	HITCH STRUT (LEFT)	1	
14	500-193	HITCH STRUT (RIGHT)	1	
13	500-342	SPILL PLATE W/LATCH (COMPLETE)	1	D-
12	500-323	SPILL PLATE LATCH ASSY. (COMPLETE) L.H.	2	
11	500-336	WING FILLER PLATE R.H.	1	D-
10	500-335	LATCH HANDLE L.H. (SHOWN)	1	D-
9	550-180	DUST SEAL	8	
8	500-334	LATCH SPRING NO. 2072	2	
7	500-333	LATCH PIN	2	D-
6	500-012	HEX NUT 3/8-16	4	
5	500-056	STD. LOCKWASHER 3/8	8	
4	500-332	WING FILLER PLATE L.H.	1	D-
3	500-003	HEX HEAD CAPSCREW 3/8-16 X 3/4" LG.	4	
2	500-192	LANE— STRUT SPRING— NO. 5267	2	
1	525-242	PAVER HOPPER WELDMENT	1	D-

NOTE:

1. REF. NO. 17, PART NO. 500-425
   REF. NO. 12, PART NO. 500-323 IS COMPRISED
   OF REF. NOS. 7, 8, 10 L.H.
   7, 8, 16 R.H.
2. AFTER PAVER SERIAL NO. 9083 SEE PAGE 3.

REPORT ALL ERRORS TO ENGINEERING DEPARTMENT

DO NOT SCALE DRAWINGS

LAYTON MANUFACTURING COMPANY
SALEM, OREGON

TITLE
SPILL PLATE LATCH ASSY.
AND WING FILLER PLATE

Rev. 2/83

PRODUCT PAVER F—525

PART NO.

DRAWN BY Ron Phelps
DATE 4-27-72
SCALE NONE

DRAWING NO C-226