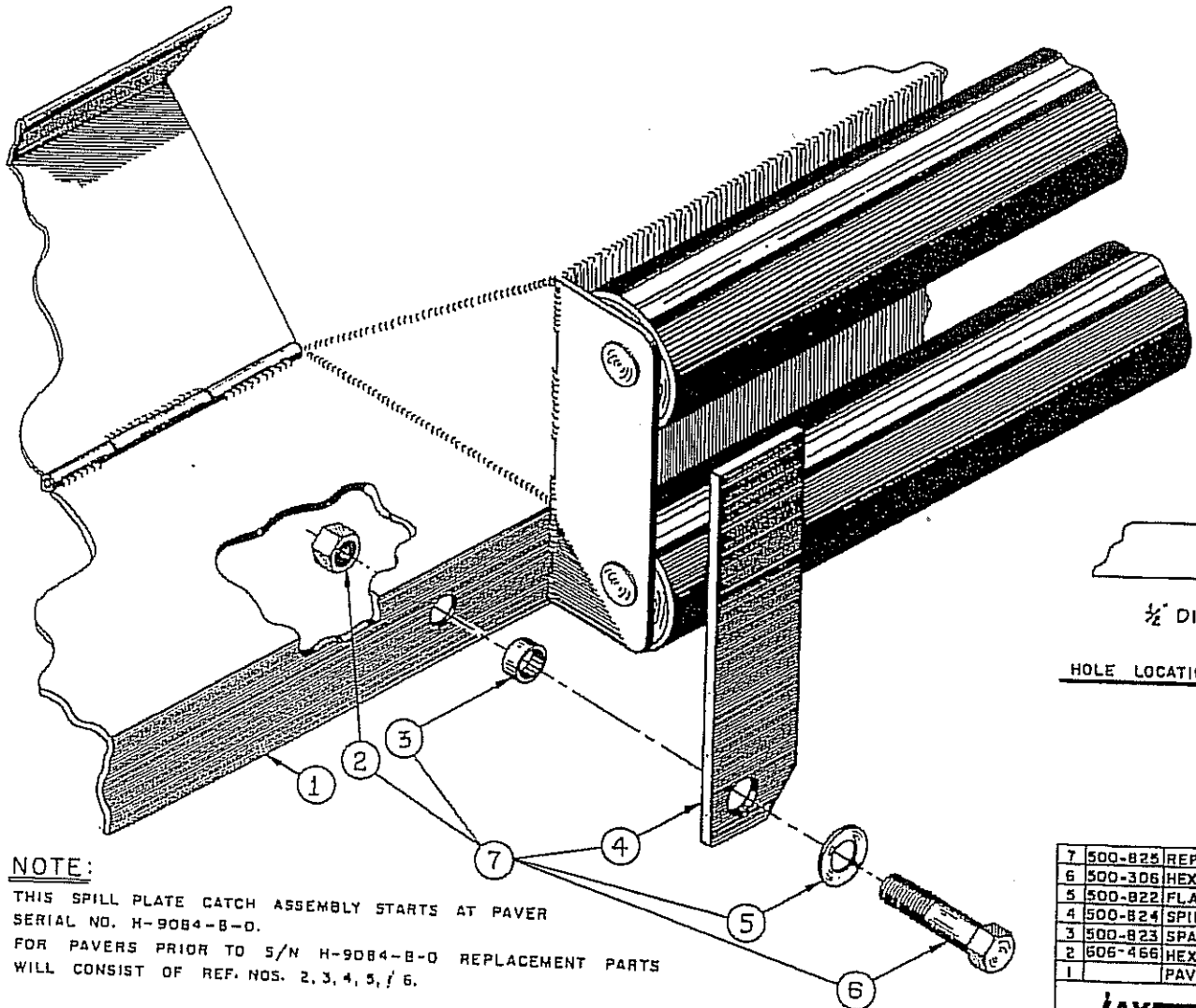

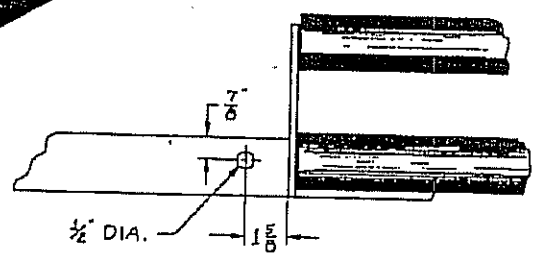

HOLE LOCATION FOR PAVERS PRIOR TO H-9084-B-0.

NOTE:

THIS SPILL PLATE CATCH ASSEMBLY STARTS AT PAVER SERIAL NO. H-9084-B-0.

FOR PAVERS PRIOR TO S/N H-9084-B-0 REPLACEMENT PARTS WILL CONSIST OF REF. NOS. 2, 3, 4, 5, & 6.

REF. NO.	PART NO.	DESCRIPTION	NO. REQ.
7	500-825	REPLACEMENT KIT	
6	500-306	HEX HD CPSCW. 1/2-13 X 1 1/2" LG.	2
5	500-822	FLAT WASHER 1/2 S.A.E.	2
4	500-824	SPILL PLATE CATCH	2
3	500-823	SPACER	2
2	606-466	HEX LOCK NUT 1/2-13	2
1		PAVER HOPPER WELDMENT	1

LAYTON MANUFACTURING COMPANY
SALEM, OREGON

TITLE: SPILL PLATE CATCH

DRAWN BY: Ron Phelps
PRODUCT: PAVER
SCALE: NONE
DATE: 7-1-80
DWG. NO. C-328