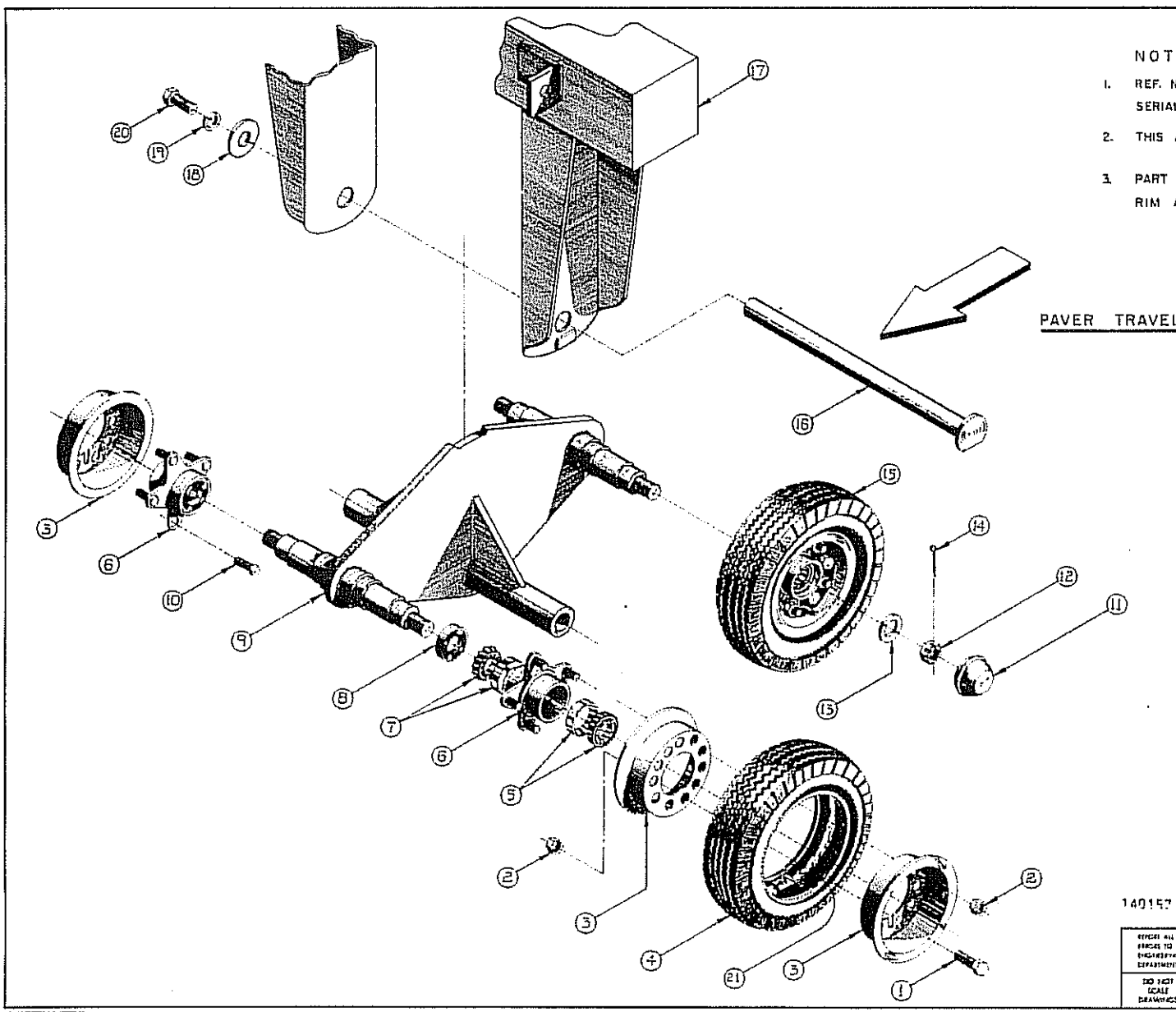

NOTE:

1. REF. NOS. 5, 6, 7 & 8 WERE INTRODUCED AT SERIAL NO. H-500-B - 2600
2. THIS ASSEMBLY IS ON PAVERS SERIAL NOS. 2601 TO 3283
3. PART NO. A-538 INCLUDES THE TIRE, TUBE AND RIM ASSY. REF. NOS. 1, 2, 3, 4 AND 21.

REF. NO.	PART NO.	DESCRIPTION	NO. REQ.	STOR. NO.
21	A - 535	INNER TUBE 5.30 - 4.50 X 6	8	
20	500-262	HEX HD. CPSW. 1/4-13 x 1" LG.	2	
19	500-058	LOCKWASHER 1/4	2	
18	A - 502	RETAINER	2	
17	A-492	UNDERCARRIAGE FRAME	1	
16	A - 501	WHEEL FRAME PIN	2	
15	500-273	WHEEL ASSEMBLY COMPLETE	8	
14	500-264	COTTER PIN 1/8 DIA. x 2" LG.	8	
13	500-265	WASHER 1" I.D. X 2" O.D.	8	
12	500-266	HEX CASTLE NUT 1-14 NF	8	
11	500-267	GREASE CAP	8	
10	500-290	WHEEL STUDS	40	
9	500-534	WHEEL FRAME	2	
8	500-280	HUB SEAL	8	
7	500-279	HUB INNER BEARING CUP & CONE	8	
6	500-278	HUB BODY	8	
5	500-277	HUB OUTER BEARING ASSEMBLY	8	
4	A - 534	TIRE 5.30 X 6 6 PLY	8	
3	*A - 530	RIM ASS'Y.	8	
2	500-288	HEX NUT 7/8-24 NF	80	
1	500-269	HEX HD. CPSW. 3/4-24 X 1" LG.	40	

LAYTON MANUFACTURING COMPANY
SALEM, OREGON

140152

TITLE: RUBBER TIRED ASSEMBLY

REVISE ALL ERRORS TO ENGINEERING DEPARTMENT

DO NOT SCALE DRAWINGS

REV. 7-85

PRODUCT: PAVER H-500

PART NO.

Jos Schafer 10-24-72

NONE

D-1118