NOTE:
PART NO. 500-676 CATWALK WITH BRACKETS INCLUDE REF. NOS. 2,3,4,5,6,7 AND 8.

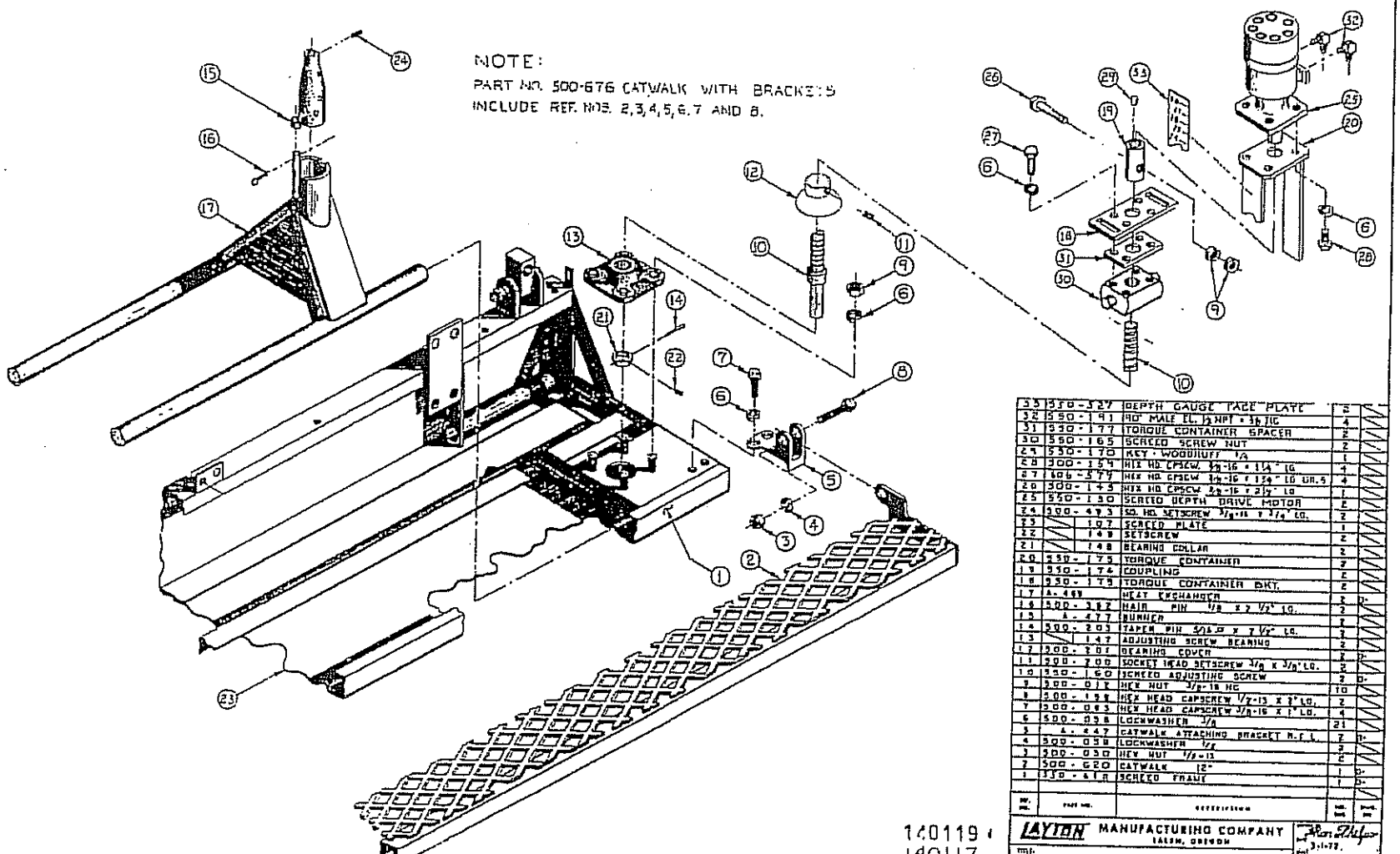

35	550-327	DEPTH GAUGE FACE PLATE	2	
32	550-191	90° MALE EL. 1/2 NPT x 1/16 JIC	4	
31	550-177	TORQUE CONTAINER SPACER	2	
30	550-165	SCREED SCREW NUT	2	
29	550-170	KEY - WOODRUFF 1/4	1	
28	300-154	HEX HD CAPSCW. 3/8-16 x 1 1/4" LG.	4	
27	606-379	HEX HD CAPSCW 3/4-16 x 1 3/4" LG GR.5	4	
26	300-143	HEX HD CAPSCW 3/8-16 x 2 1/2" LG.	1	
25	550-130	SCREED DEPTH DRIVE MOTOR	2	
24	300-493	SQ. HD. SETSCREW 3/8-16 x 3/4" LG.	2	
23	107	SCREED PLATE	1	
22	148	SETSCREW	2	
21	148	BEARING COLLAR	2	
20	550-175	TORQUE CONTAINER	2	
19	550-174	COUPLING	2	
18	550-179	TORQUE CONTAINER BKT.	2	
17	A-469	HEAT EXCHANGER	2	
16	500-382	HAIR PIN 1/8 x 2 1/2" LG.	2	
15	A-477	RUNNER	2	
14	500-203	TAPER PIN 5/16 D x 2 1/2" LG.	1	
13	147	ADJUSTING SCREW BEARING	1	
12	500-201	BEARING COVER	2	
11	500-200	SOCKET HEAD SETSCREW 3/8 x 3/8" LG.	2	
10	550-160	SCREED ADJUSTING SCREW	2	
9	500-012	HEX NUT 3/8-16 HC	10	
8	500-198	HEX HEAD CAPSCREW 1/2-13 x 3" LG.	2	
7	500-083	HEX HEAD CAPSCREW 3/8-16 x 1" LG.	4	
6	500-038	LOCKWASHER 3/8	21	
5	A-447	CATWALK ATTACHING BRACKET R.F.L.	2	
4	500-038	LOCKWASHER 1/2	2	
3	500-030	HEX NUT 1/2-13	2	
2	500-620	CATWALK 12"	1	
1	550-618	SCREED FRAME	1	
NO. REQ.	PART NO.	DESCRIPTION	NO. REQ.	NO. REQ.

140119
140117

LAYTON MANUFACTURING COMPANY
SALEM, OREGON

Ron Philp 3-1-78

TITLE: HEAT EXCHANGER LOCATION
SCREED ADJUSTING SCREW ASSY.
D-550 SUPER PAVER

DO NOT SCALE DRAWINGS

PAVER D-550

D-1411