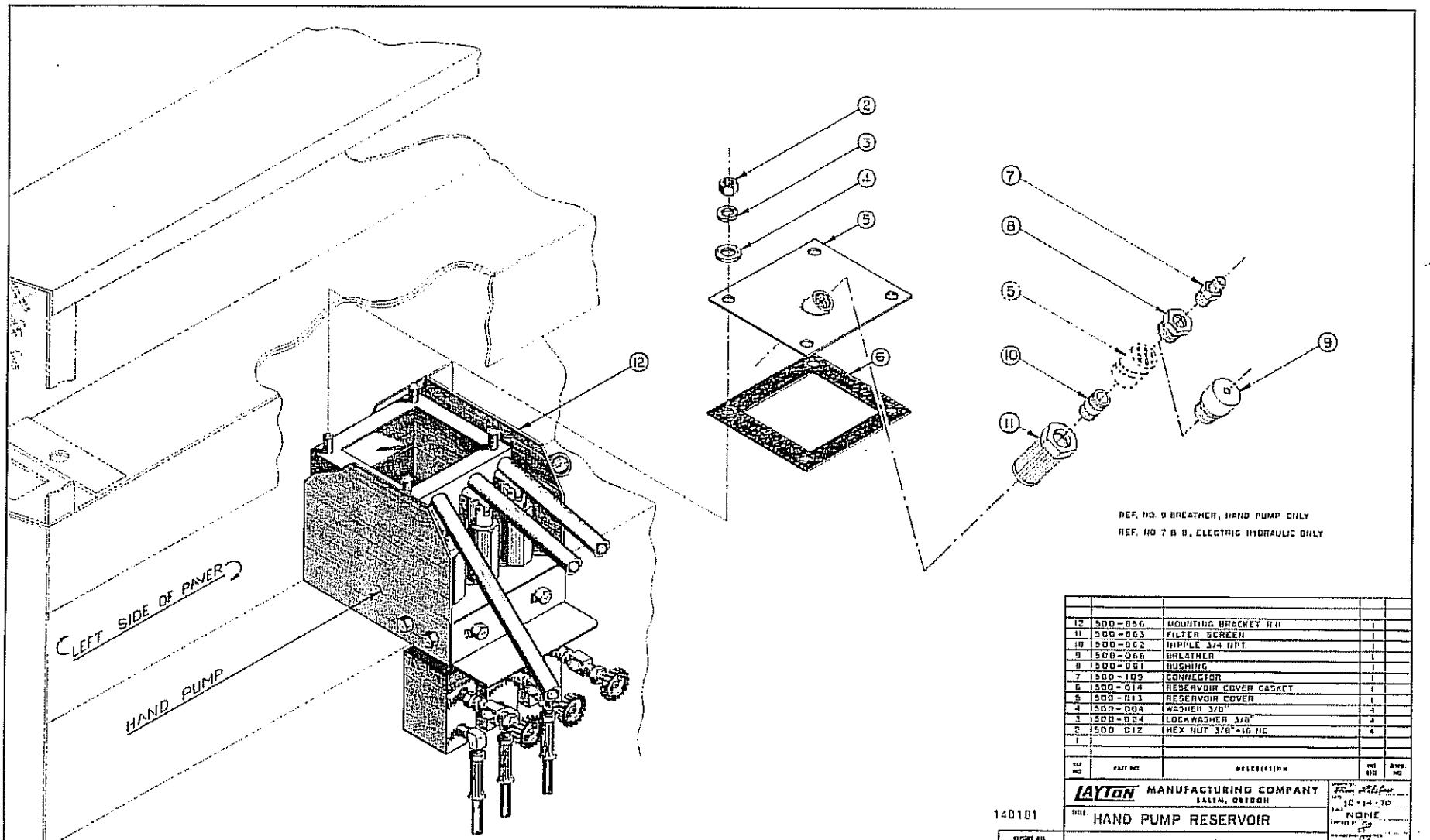

REF. NO	PART NO	DESCRIPTION	NO. REQ	ASSY. NO
12	500-056	MOUNTING BRACKET RH	1	
11	500-063	FILTER SCREEN	1	
10	500-062	NIPPLE 3/4 NPT	1	
9	500-066	BREATHER	1	
8	500-061	BUSHING	1	
7	500-109	CONNECTOR	1	
6	500-014	RESERVOIR COVER GASKET	1	
5	500-013	RESERVOIR COVER	1	
4	500-004	WASHER 3/8"	4	
3	500-024	LOCKWASHER 3/8"	4	
2	500-012	HEX NUT 3/8"-16 NC	4	
1				

LAYTON MANUFACTURING COMPANY
SALEM, OREGON

140101

TITLE: HAND PUMP RESERVOIR COVER ASS'Y.

REV. 10-85

DATE: 10-14-70
SCALE: NONE
DRAWN BY:
DH-900-34
D-492

RIGHT AS RIGHTS TO ENGINEERING DEPARTMENT

NO NOT SCALE DRAWINGS