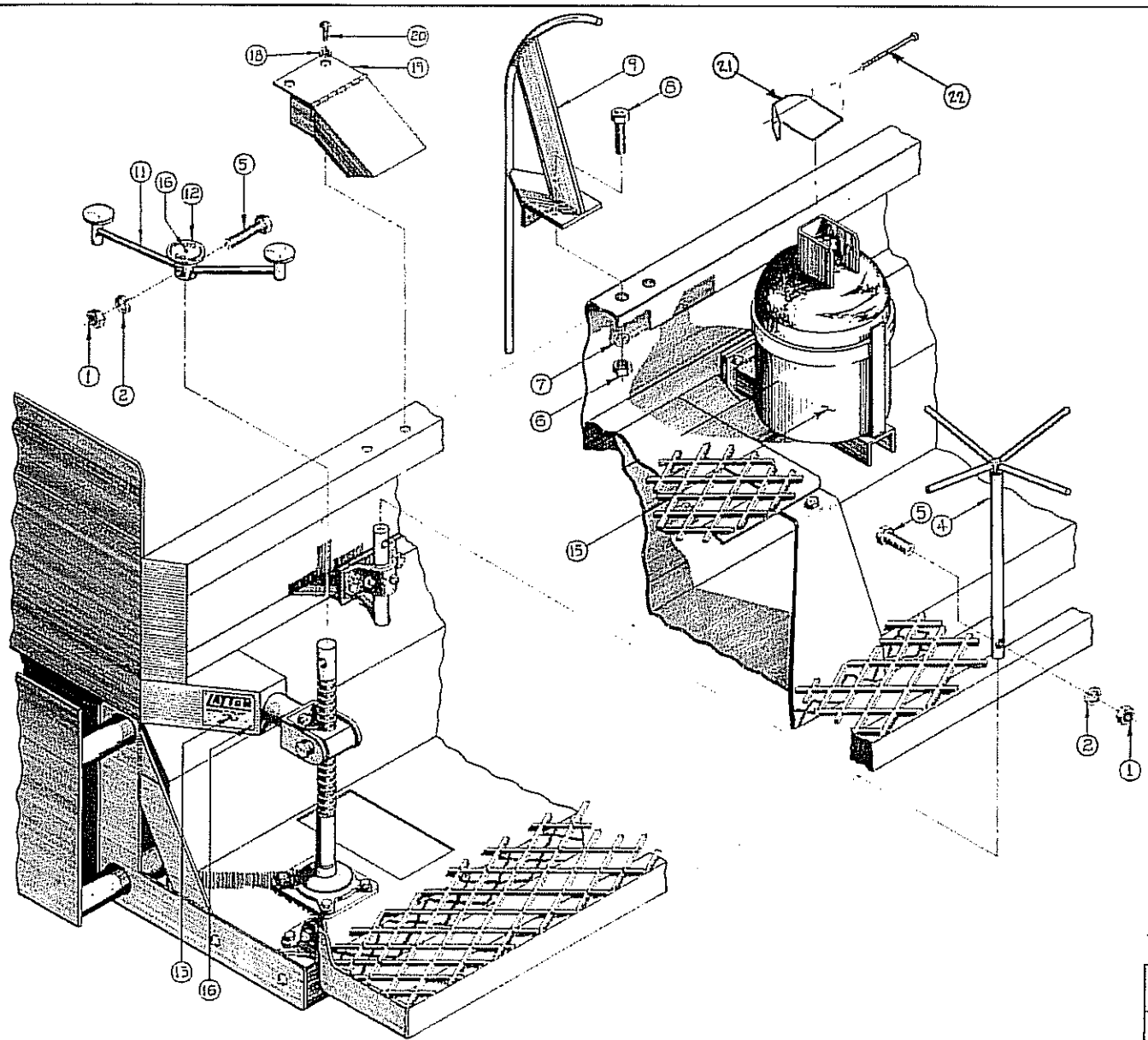

ITEM NO	PART NO	DESCRIPTION	NO REQ	INVE. NO.
22	500-830	PIN, COVER	1	
21	500-831	COVER	1	
20	800-128	RD. HD. MACHINE SCREW 1/4-20 X 3/4" LG.	2	
19	398	HAND PUMP COVER	1	
18	500-071	STL LOCKWASHER 1/4	2	
17				
16	500-316	METALIC DRIVE SCREW NO. 4	8	
15	A-460	PROPANE TANK W/COVER	1	
14				
13	500-325	SERIAL NUMBER PLATE W/SCREWS	1	
12	500-324	TURN DIRECTION PLATE W/SCREWS	2	
11	142	SCREED ADJUSTING HANDLE	2	D
10				
9	A-401	TAIL GATE STOP	1	D
8	500-059	HEX HEAD CAPSCREW 1/2"-13NC X 1 1/4" LG	2	
7	500-058	LOCKWASHER 1/2	8	
6	500-080	HEX NUT 1/2-13 NC	2	
5	500-195	HEX HEAD CAPSCREW 3/8-16NC X 2" LG	4	
4	128	SCREED EXTENSION HANDLE	2	D
3				
2	500-056	LOCKWASHER 3/8"	4	
1	500-012	HEX NUT 3/8-16 NC	4	

LAYTON MANUFACTURING COMPANY
SALEM, OREGON

140149

TITLE: PAVER HANDLES

REV. 7-85

DO NOT SCALE DRAWINGS

PRODUCT: PAVER 500

PART NO:

DATE: 2-22-72

SCALE: NONE

DRAWING NO: D-859

LMC-EN-508

PAGE H-22